Odin Rack Manual

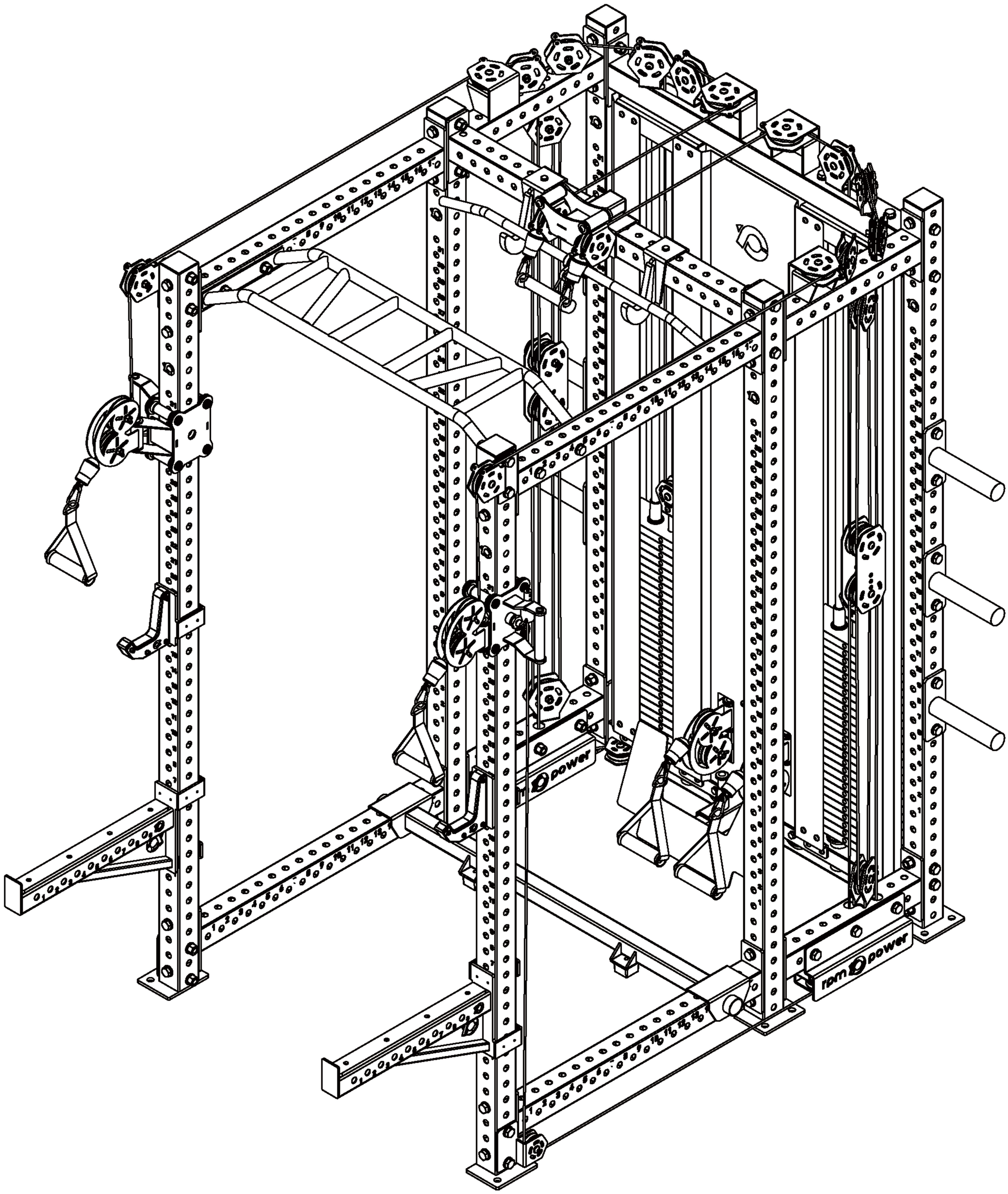

ODIN RACK MANUAL / SUPPLEMENT

FULL RACK OR HALF RACK?

Read the notes for your model before using the assembly drawings.

The illustrated pages that follow show the Full ODIN rack. They are a reference for shared parts of the Half ODIN, not an exact diagram of the Half Rack layout.

FULL ODIN RACK

Has the secondary front cage shown in the diagrams. The Full ODIN is freestanding: no wall or floor fixing is required for this model. Follow the main manual for the frame and relevant options.

HALF ODIN RACK

Has no secondary front cage. Parts 11, 28 and 32 move to its front uprights in the same positions. Fit part 11 BEFORE the top connecting bars. The Half ODIN MUST be bolted to the floor before use.

HOW TO ADAPT THE FULL ODIN DRAWINGS FOR HALF ODIN

01 FIT PART 11 BEFORE THE TOP BARS

Slide both part 11 sleeves onto the Half ODIN front uprights BEFORE fitting the top connecting bars. Continue with the shared frame diagrams, omitting the absent secondary front-cage members.

02 POSITION PARTS 28 & 32

With part 11 in place, fit part 28 (upper pulley traction set) and part 32 (lower pulley traction assembly) to the Half ODIN front uprights in the same relative positions shown on the Full ODIN front element.

03 CHECK THE CABLE PATH

Follow the same cable route shown for the Full ODIN, but terminate it earlier at the Half Rack front upright: there is no secondary cage to continue to. Keep the cable in each pulley groove; do not cut or force it.

HALF ODIN COMPATIBILITY: Standard and Inverted Smith Rails are NOT compatible. Do not fit the Full ODIN Smith Rail components or use its Smith Rail manuals for the Half Rack.

Original Full ODIN manual begins after the next Half ODIN floor-fixing page.

ODIN RACK MANUAL / SUPPLEMENT

HALF ODIN: FLOOR FIXING

Required for the Half Rack only. Full ODIN remains freestanding.

The Half ODIN is NOT freestanding. Secure it to a suitable floor using the designated base fixing positions before any training, rack loading or use of the cable stations.

01 ARRANGE COMPETENT FLOOR FIXING

The customer is responsible for arranging and verifying correct floor fixing. Attempt it yourself only if you have the knowledge, tools and ability to assess the floor and choose and install suitable anchors; otherwise arrange a qualified installer.

02 POSITION, LEVEL & MARK

With enough help, position the main frame. If easier to move, weight stacks may be left until late in assembly. Use a spirit level and straightedge to check the uprights are plumb and the frame is level and straight. Mark the base fixing holes.

03 CHECK FOR SERVICES & DRILL

Move the rack clear before drilling. Check for concealed pipes, cables or other services. Drill the floor only at the marked positions, following the chosen anchor manufacturer's hole size, depth and cleaning instructions.

04 LEVEL & FIX THE RACK

Reposition the rack. If the floor is uneven, use suitable stable washers or spacers under the upright base plates before fixing; keep each plate firmly supported. Install floor anchors to their manufacturer's specification, then recheck level and tighten frame hardware.

05 FIT STACKS & CHECK BEFORE USE

Confirm the rack cannot rock and all anchors are secure. If deferred, fit the weight stacks as one of the last steps. Check smooth plate and cable travel, selector-pin engagement, and that J-hooks and safety bars are fully engaged.

IMPORTANT

Anchor size, drill depth and torque depend on the floor and fixing system: follow the anchor manufacturer or a qualified installer. An uneven floor or frame can increase weight-stack friction; correct alignment and do not use a stack that binds.

These Half ODIN notes do not change the freestanding installation of the Full ODIN.

Parts Details-1

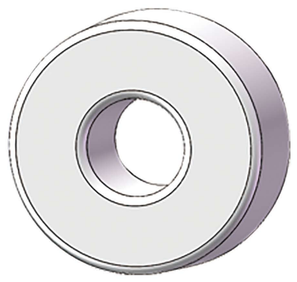		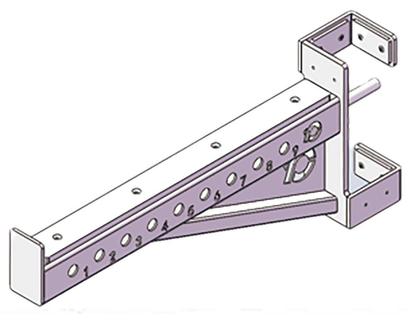		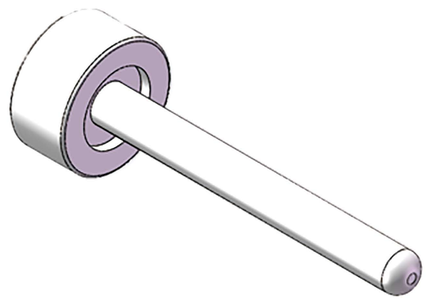	
NO.1	20 shock-absorbing pads *4PCS	NO.2	Protective bar *a pair	NO.3	Magnetic pull pin *2PCS
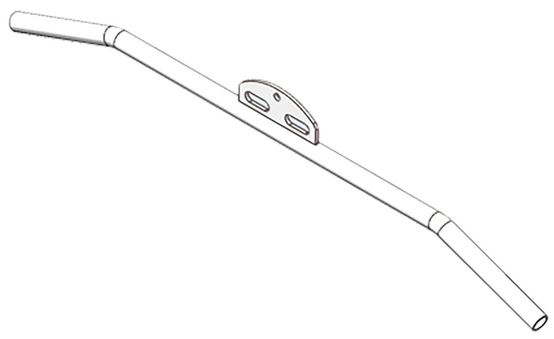		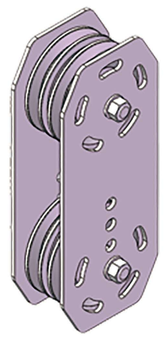		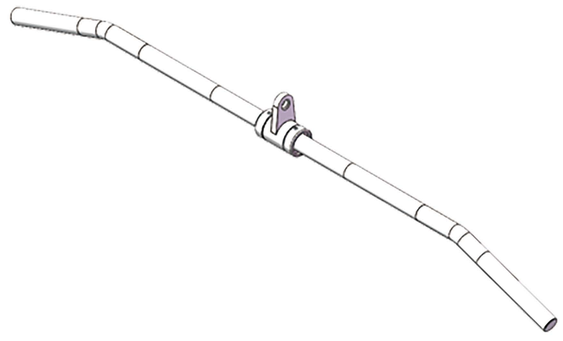	
NO.4	Pull handle *1PC	NO.5	Movable pulley *2PCS	NO.6	High pull handle *1PC
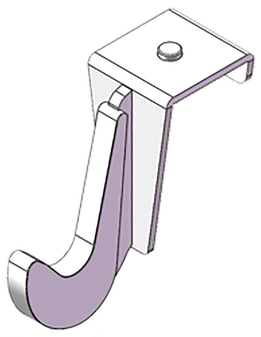		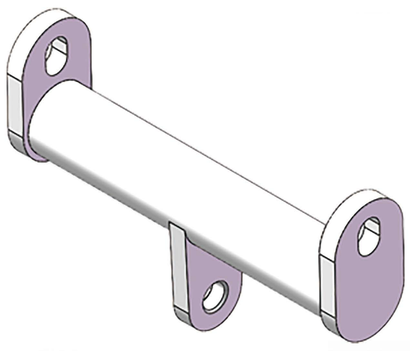		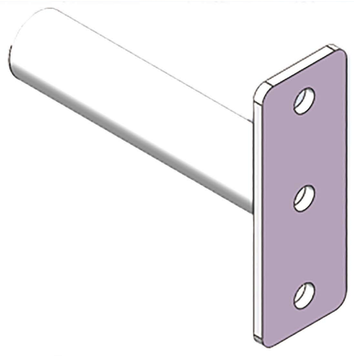	
NO.7	High pull handle hook *2PCS	NO.8	High pull handle connection plate*1PC	NO.9	Mounting group *6PCS
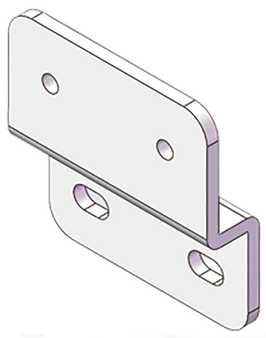		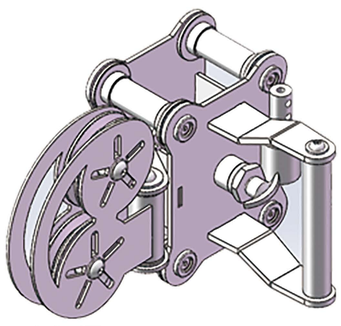		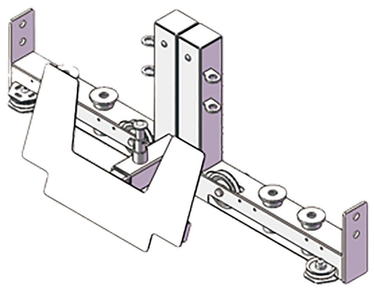	
NO.10	Guard plate fixing plate *8PCS	NO.11	Sliding sleeve *a pair	NO.12	Pedal group *1PC
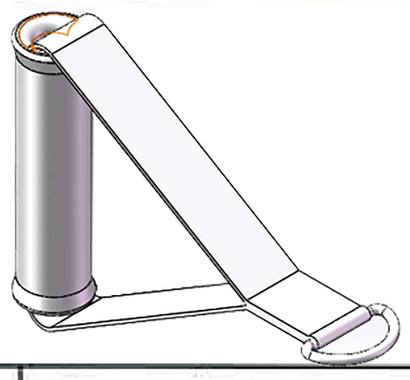		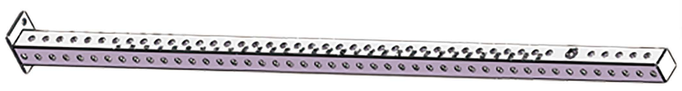		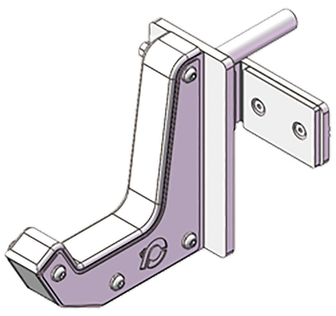	
NO.13	Pull handle*4PCS	NO.14	stand column *6PCS	NO.15	Column hook assembly *a pair
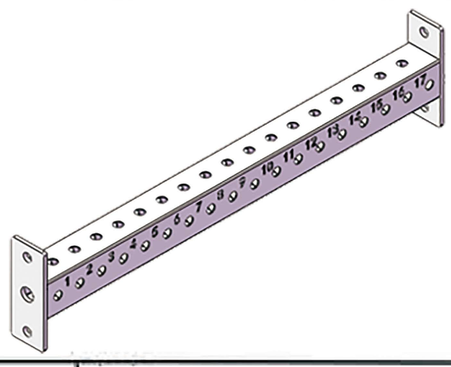		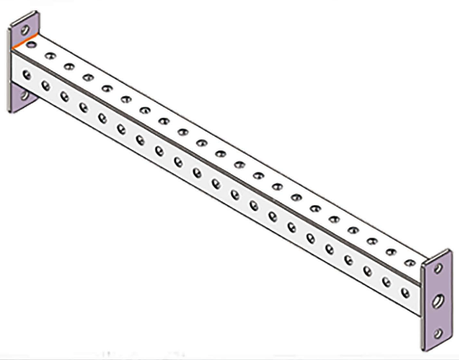		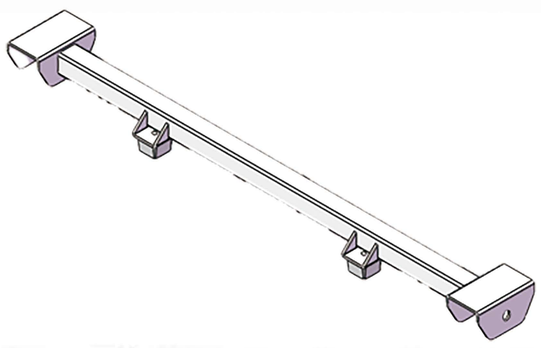	
NO.16	Column connection group *4PCS	NO.17	The connecting pipe on the column*1PC	NO.18	Connect and fix the bar *1PC

Parts Details-2

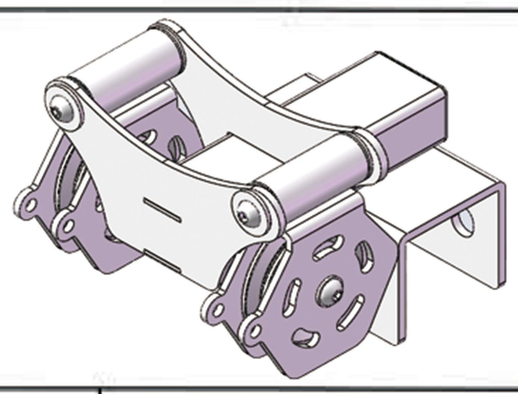				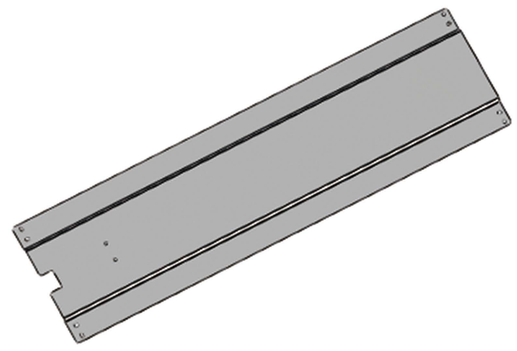	
NO.19	Connecting pipe sliding assembly*1PC	NO.20	Counterweight side guard plate*4PCS	NO.21	Counterweight rear guard plate*1PC
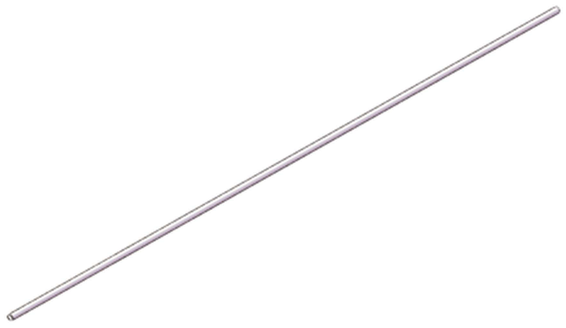		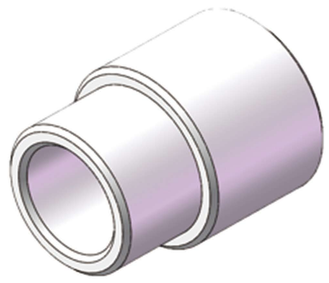		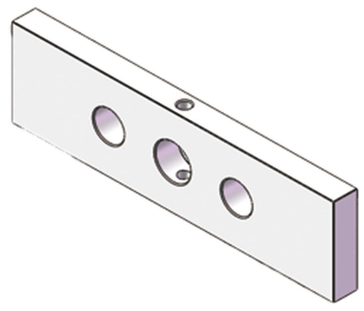	
NO.22	Counterweight slider *4PCS	NO.23	Counterweight sliding rod fixing sleeve*4PCS	NO.24	Counterweight plate *100PCS
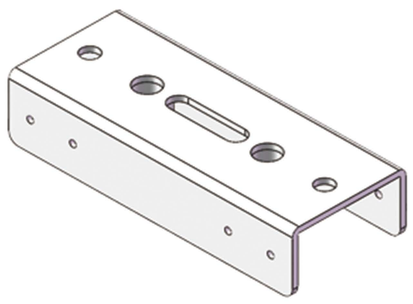		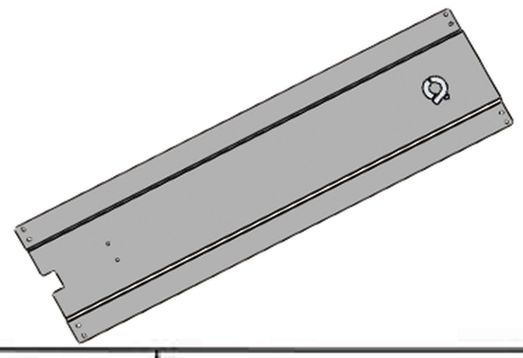		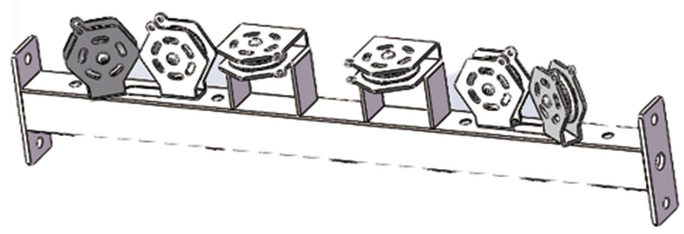	
NO.25	Fixed assembly of counterweight plates*2PCS	NO.26	Counterweight front guard plate*1PC	NO.27	Counterweight Upper Pulley Assembly*1PC
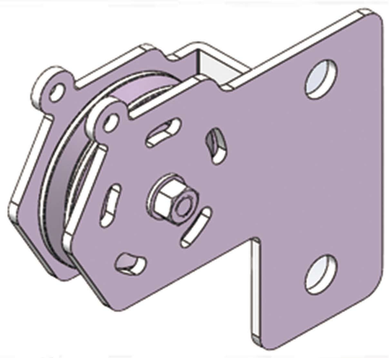		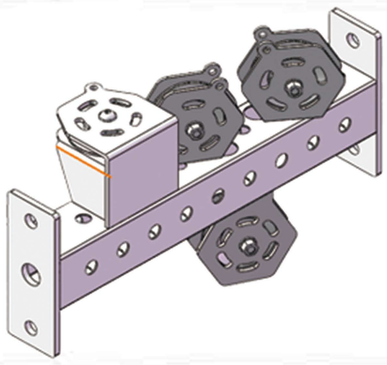		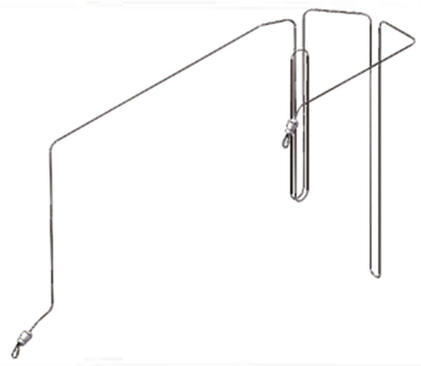	
NO.28	Upper Pulley Traction Set *2PCS	NO.29	Upper pulley assembly *a pair	NO.30	Up wiring*2PCS
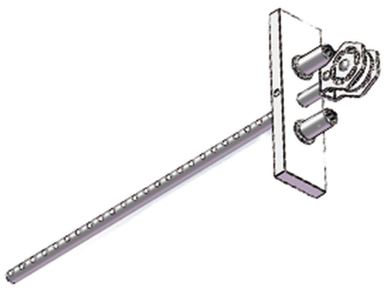		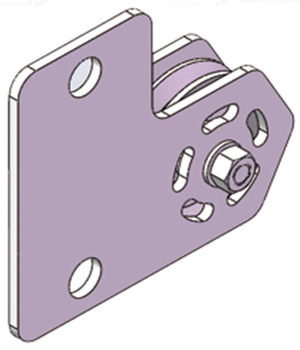		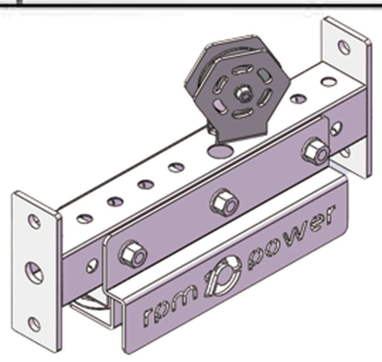	
NO.31	Head Slide Group *2PCS	NO.32	Lower pulley traction-assembly*2PCS	NO.33	Lower pulley block *a pair
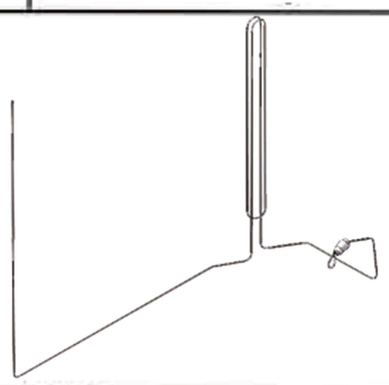		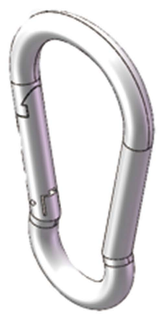		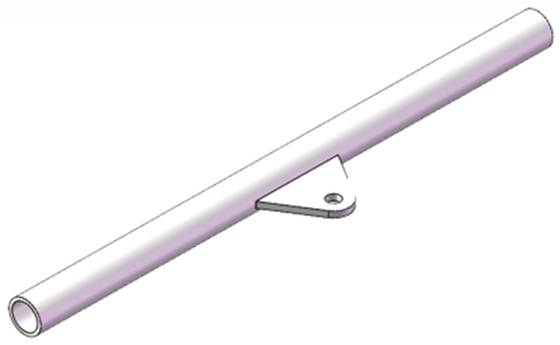	
NO.34	Lower wiring *2PCS	NO.35	Small gourd hook*7PCS	NO.36	small pull handle*1PC

Parts Details-3

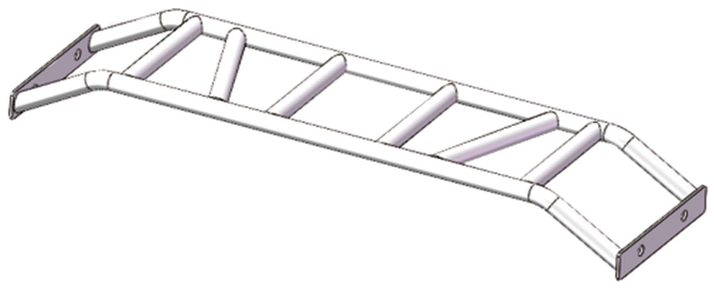

NO.37	Pull-up *1PC

Parts Details-4

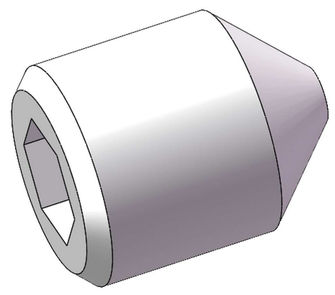		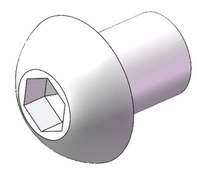		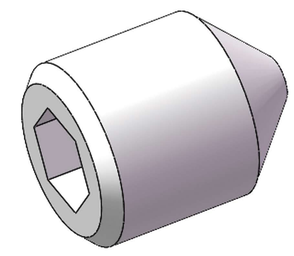	
A	Hex Socket Set Screw (M8X6)*8PCS	B	Hex Socket Semicircular Head Screw(M8X10)*52PCS	C	Hex Socket Set Screw (M8X10)*6PCS
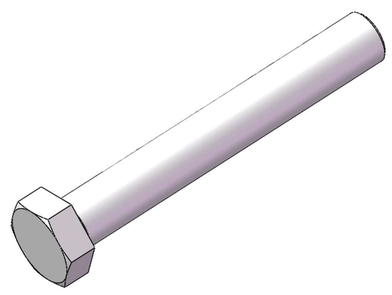		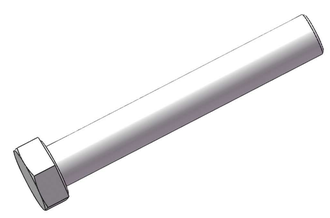		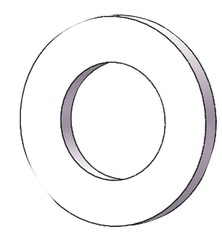	
D	Hexagon socket screw (M16X120)*6PCS	E	Hexagon socket screw (M16X100)*60PCS	F	WASHER(M8)*52PCS
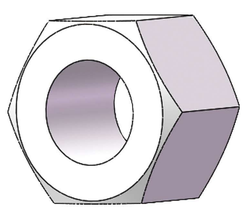		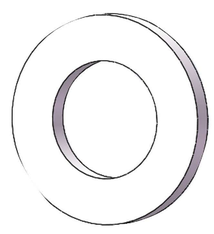			
G	LOCKNUT(M16)*66PCS	H	WASHER(M16)*132PCS		

STEPS

step	NO	NAME	NUM	NO	NAME	NUM
1	12	Pedal group	1	D	M16X120	4
	14	stand column	6	E	M16X100	12
	16	Column connection group	2	G	LOCKNUT(M16)	16
	33	Lower pulley block	a pair	H	WASHER(M16)	32

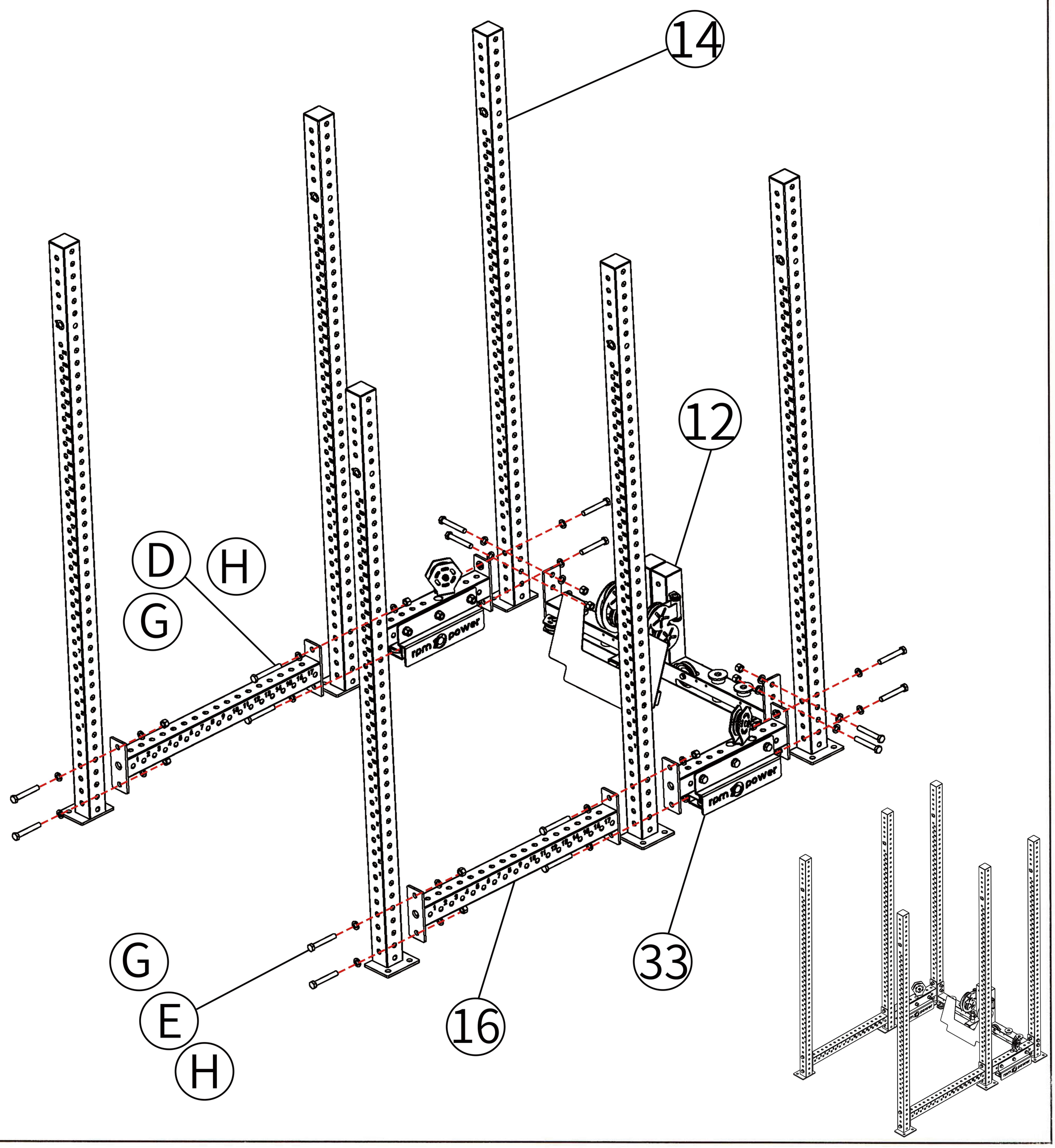

STEP						
STEP	NO	NAME	NUM	NO	NAME	NUM
2	1	20 shock-absorbing pads	4			
	11	Sliding sleeve	a pair			
	22	Counterweight slider	4			
	24	Counterweight plate	100			
	31	Head Slide Group	2			

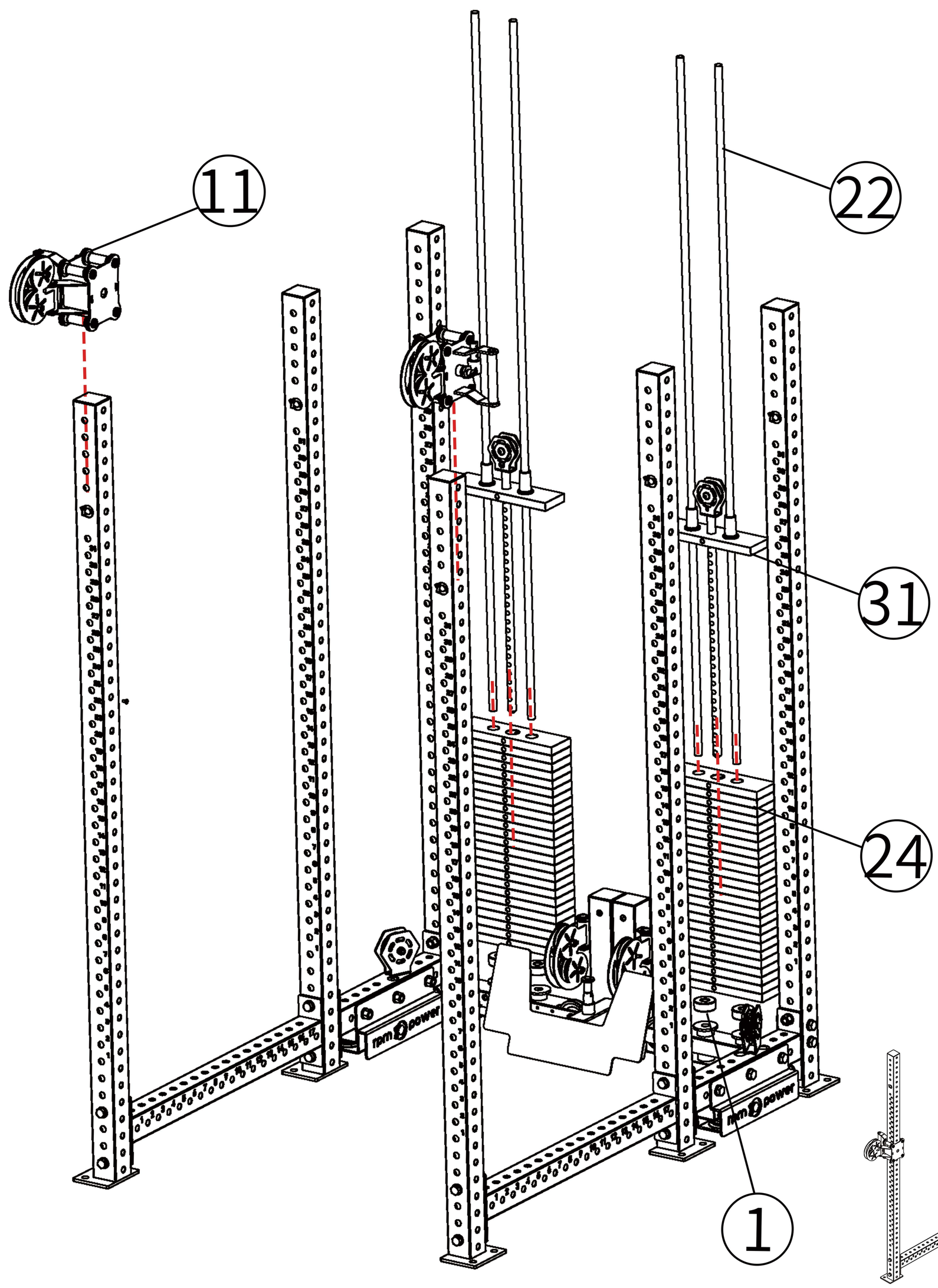

STEP						
STEP	NO	NAME	NUM	NO	NAME	NUM
3	17	The connecting pipe on the column	1	A	Hex Socket Set Screw (M8X6)	8
	19	Connecting pipe sliding assembly	1	D	M16X120	2
	23	Counterweight sliding rod fixing sleeve	4	E	M16X100	12
	25	Fixed assembly of counterweight plates	2	G	LOCKNUT(M16)	14
	27	Counterweight Upper Pulley Assembly	1	H	WASHER(M16)	28

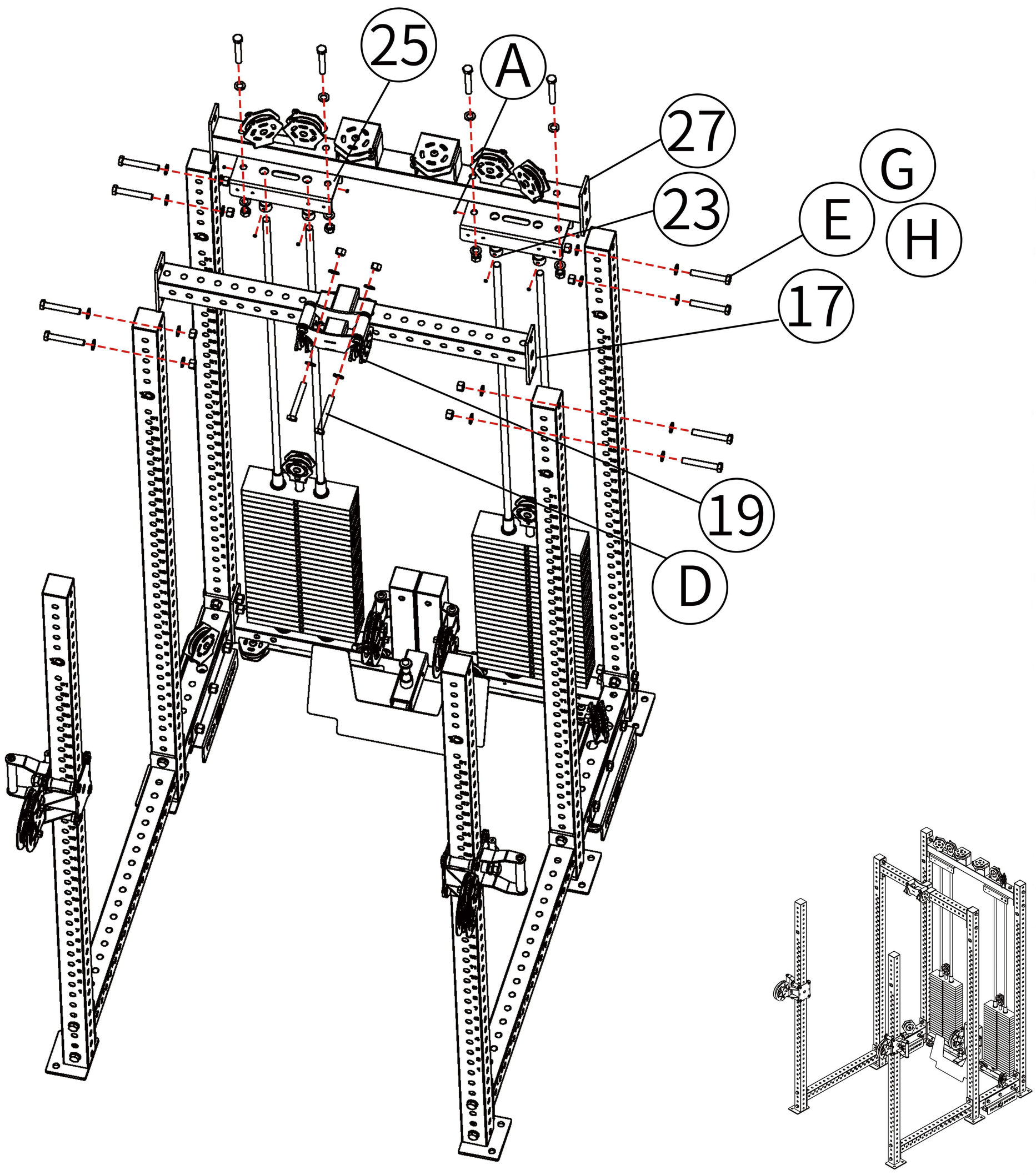

STEP						
STEP	NO	NAME	NUM	NO	NAME	NUM
4	9	Mounting group	6	E	M16*100	36
	16	Column connection group	2	G	LOCKNUT(M16)	36
	28	Upper Pulley Traction Set	2	H	WASHER(M16)	72
	29	Upper pulley assembly	a pair			
	32	Lower pulley traction assembly	2			
	37	Pull-up	1			

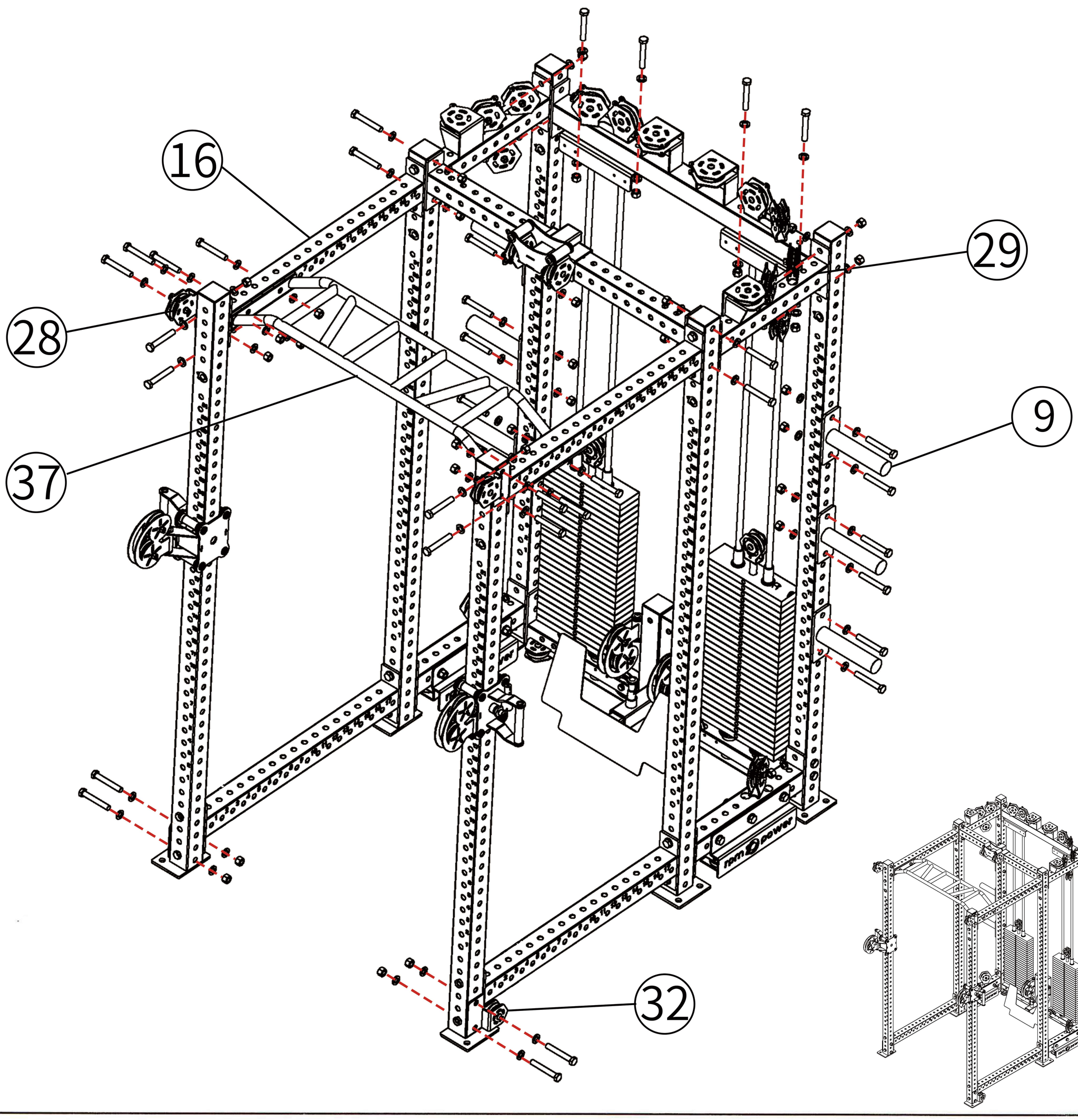

STEP						
STEP	NO	NAME	NUM	NO	NAME	NUM
5	5	Movable pulley	2	C	Hex Socket Set Screw (M8X10)	6
	7	High pull handle hook	2			
	8	High pull handle comection plate	1			
	30	Up wiring	2			
	34	Lower wiring	2			
	35	Small gourd hook	1			

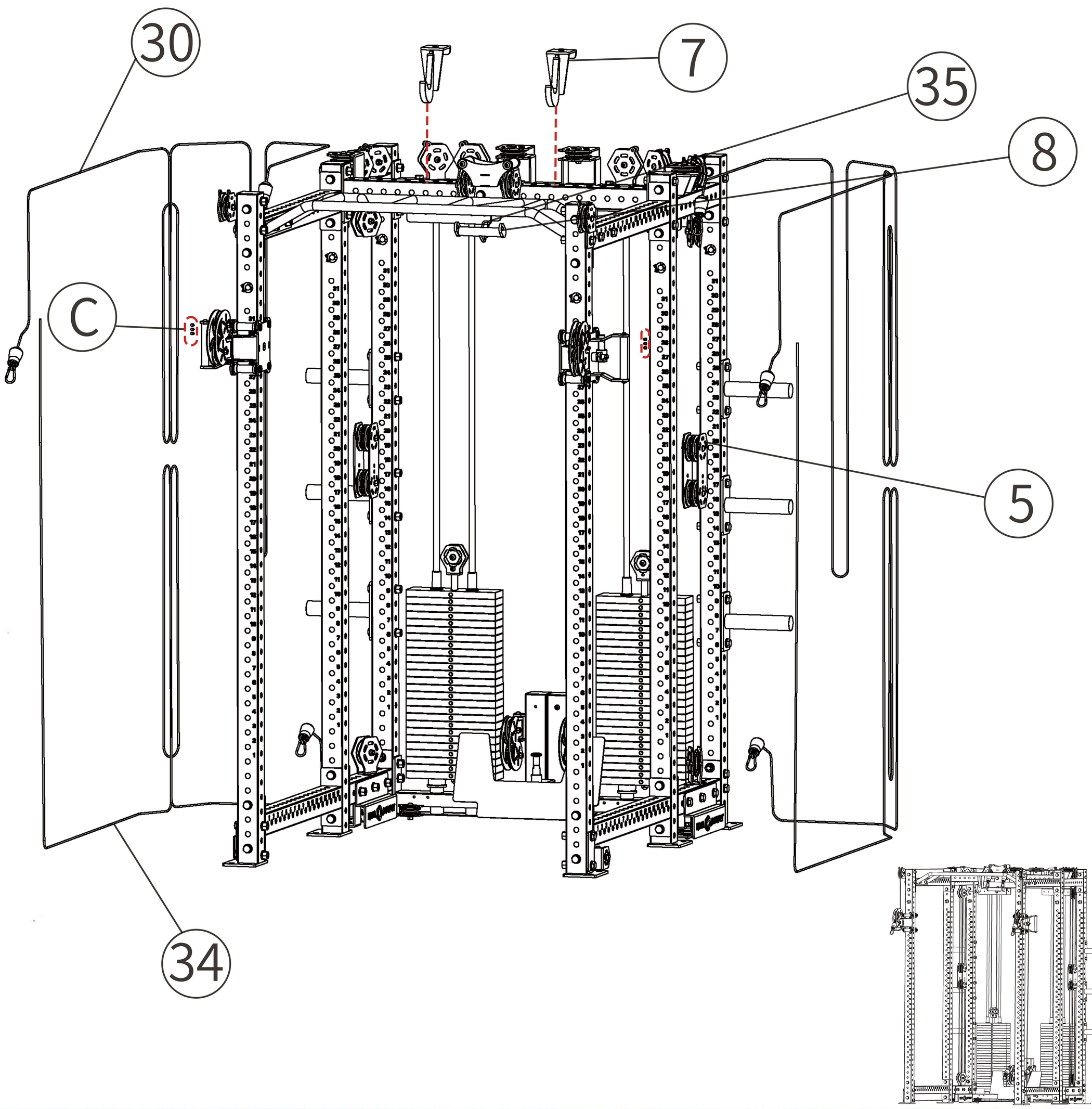

STEP						
STEP	NO	NAME	NUM	NO	NAME	NUM
5-1						

UPPER CABLE ROUTING

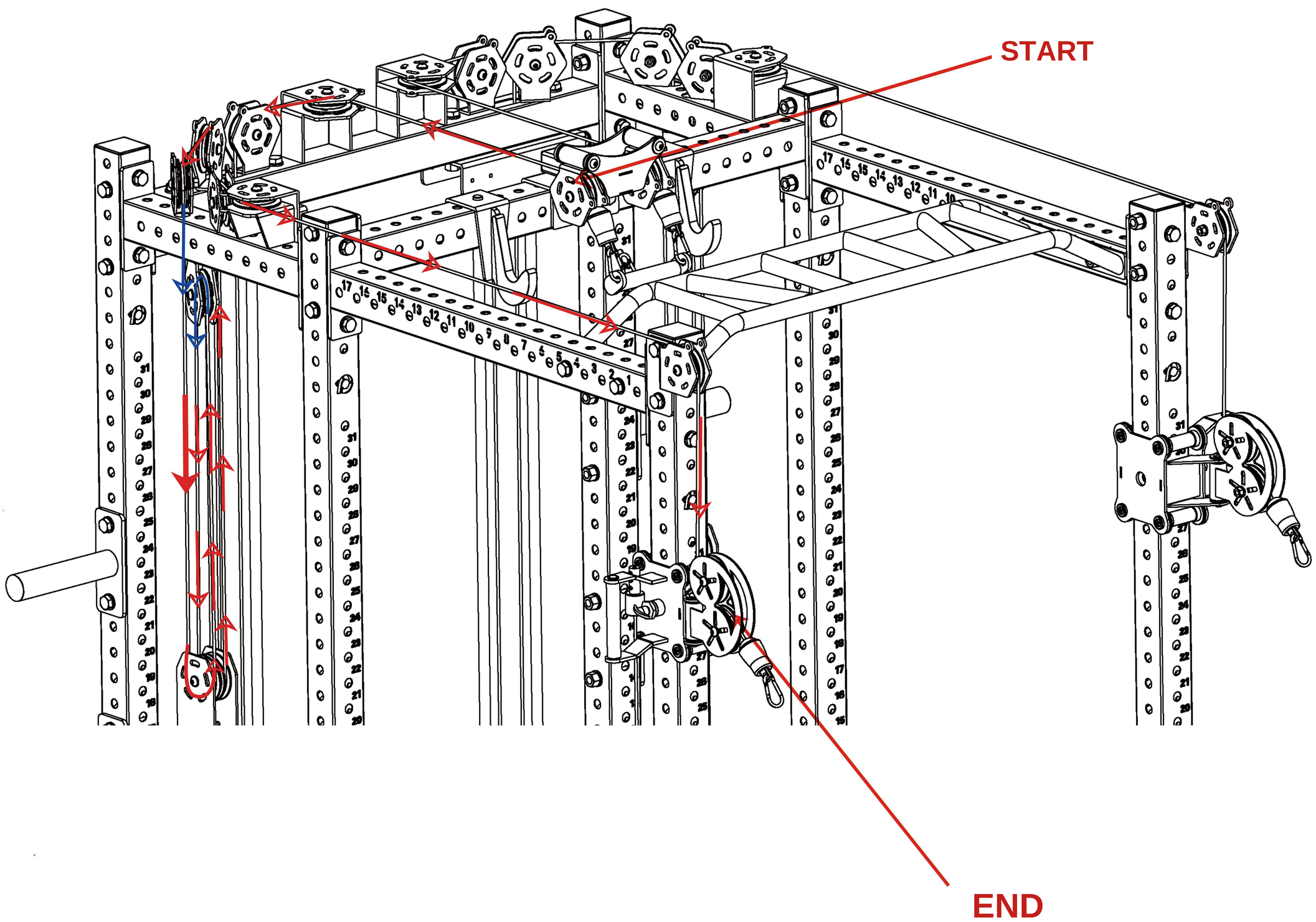

STEP						
STEP	NO	NAME	NUM	NO	NAME	NUM
5-2						

LOWER CABLE ROUTING

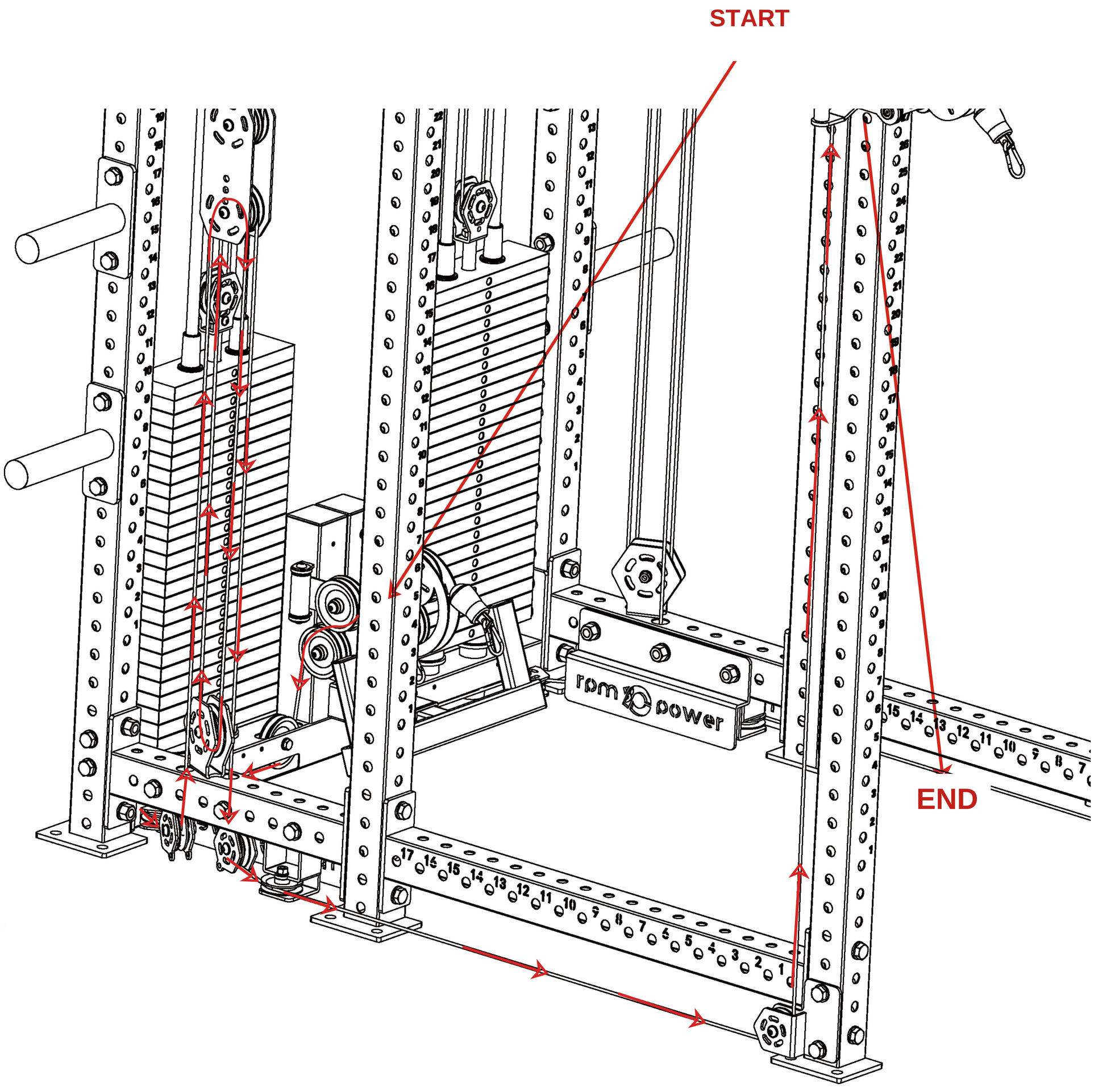

STEP						
STEP	NO	NAME	NUM	NO	NAME	NUM
5-3						

UPRIGHT HOLE DIAMETER & SPACING (MM)

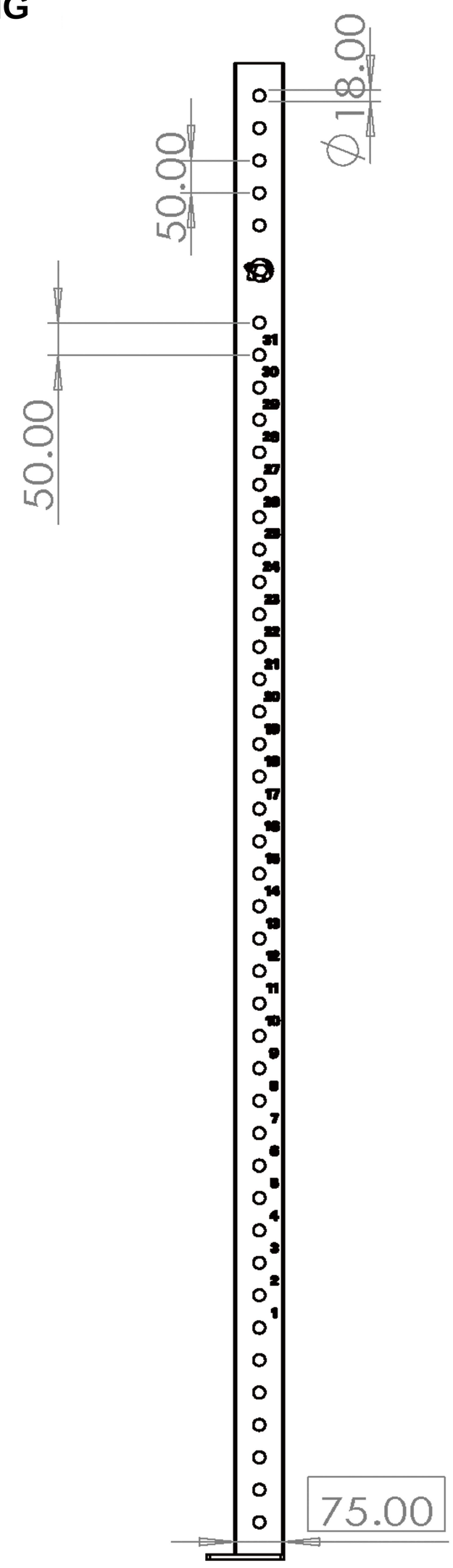

STEP						
STEP	NO	NAME	NUM	NO	NAME	NUM
6	10	Guard plate fixing plate	8	B	M8X10	52
	20	Counterweight side guard plate	4	F	WASHER(M8)	52
	21	Counterweight rear guard plate	1			
	26	Counterweight front guard plate	1			

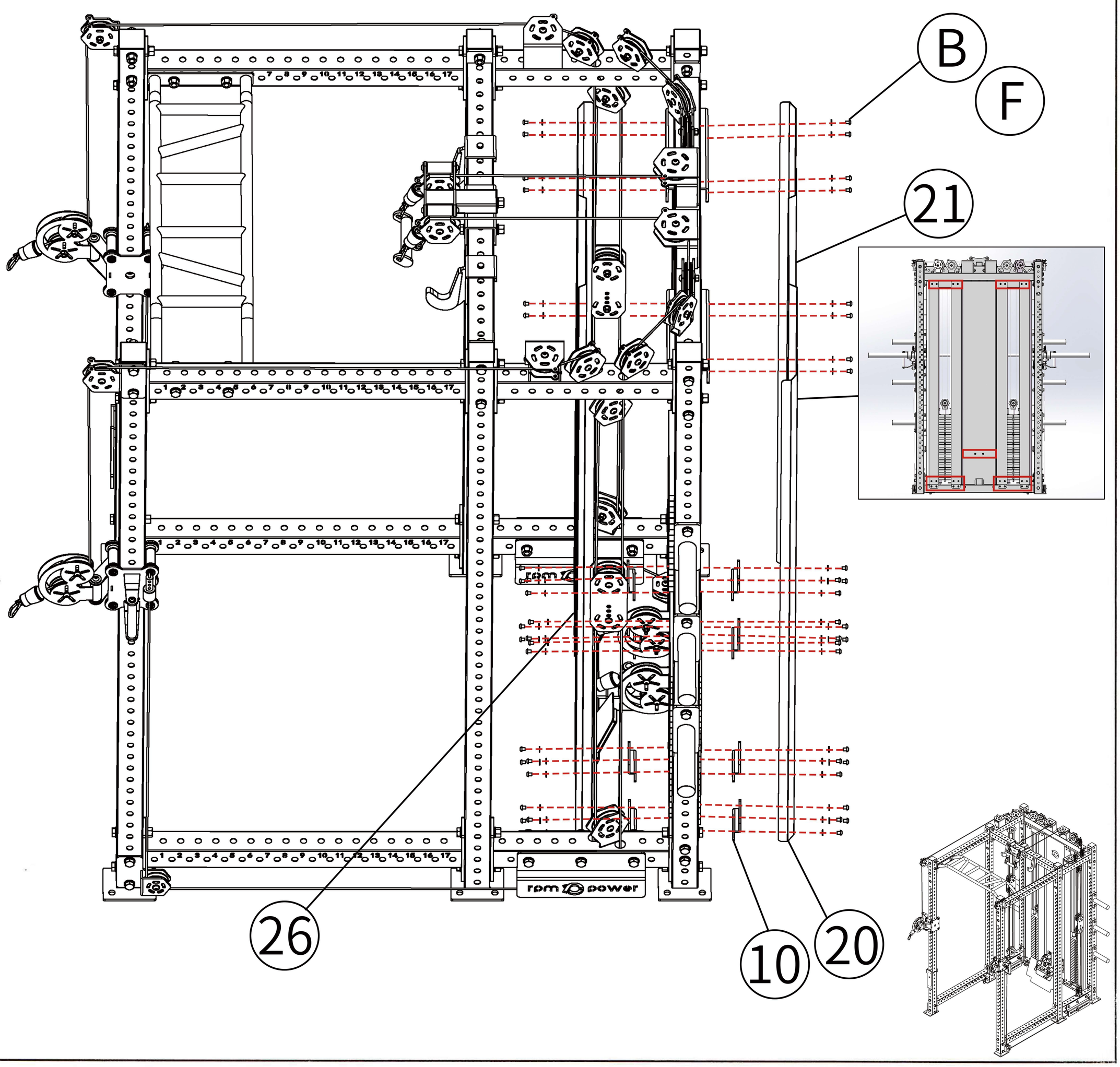
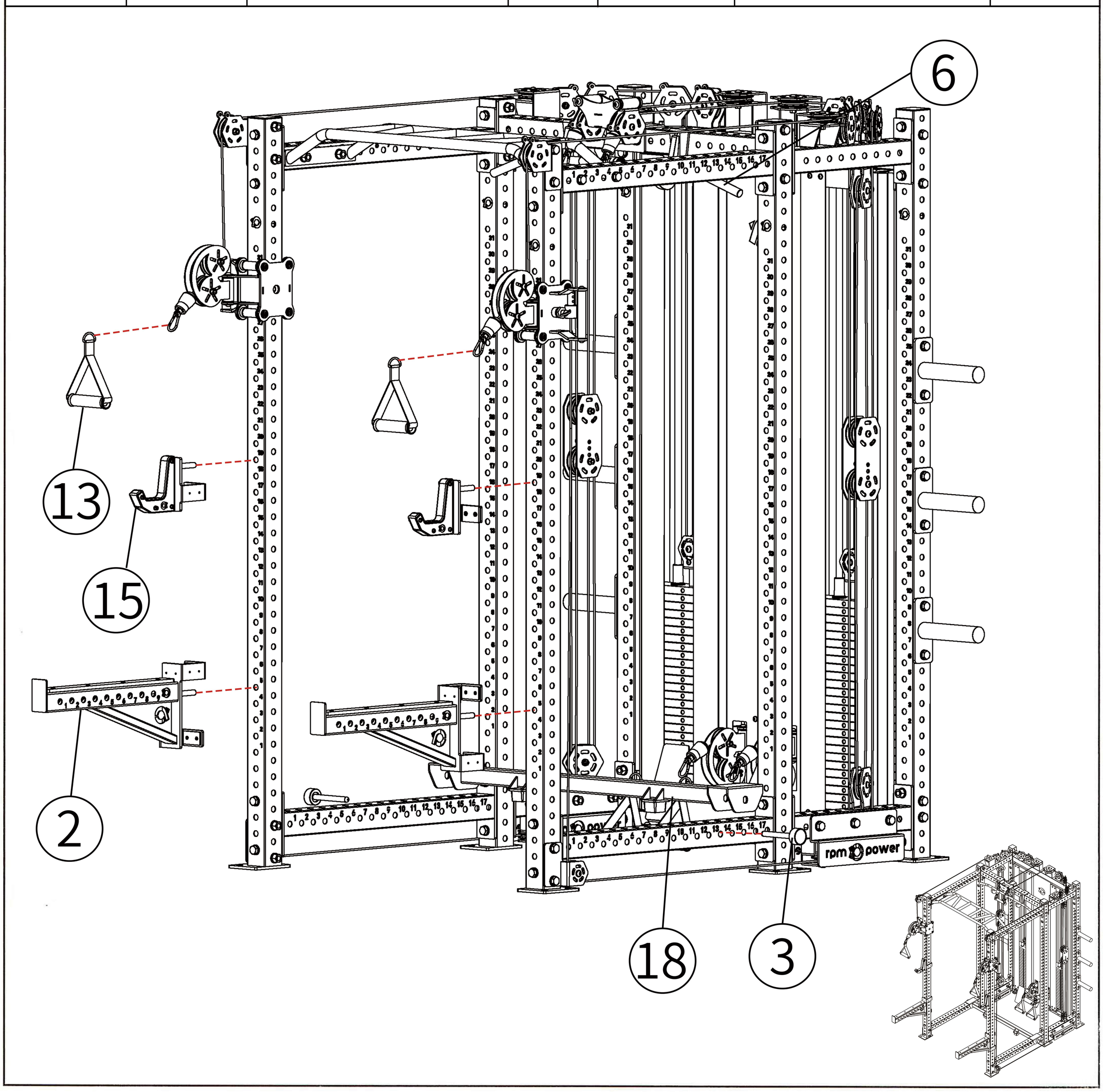
STEP						
STEP	NO	NAME	NUM	NO	NAME	NUM
7	2	Protective bar	2			
	3	Magnetic pull pin	2			
	6	High pull handle	1			
	13	**Pull handle**	2			
	15	Column hook assembly	2			
	18	Connect and fix the bar	1